# Chapter 2
# Satellite Configuration Design

**Abstract** This chapter discusses the process of integration of the subsystem components and development of the satellite configuration to achieve a final layout for a satellite; the process will be applied on a test case and it is called "Small Sat". The Small Sat structural configuration is designed to accommodate all of the mission components. All mechanical requirements are derived from the satellite's configuration. The process used to create the satellite configuration of Small Sat is described. It begins with mission definition, launch vehicle selection, and subsystem identification. This is followed by a description of the satellite composition, and the major design constraints that guide the configuration design. Then a configuration development process is presented to create the preliminary configuration. Finally, the issued layout drawings and the calculated mass properties for the developed satellite are presented.

## 2.1 The Process of Configuring a Satellite

The first step in designing a satellite, once its top level requirements are identified, is to define (at least roughly) the orbit and the payload's function, field of view, required power, mass, and size. From the payload's features, the satellite's total mass and volume can be estimated based on the data collected from previous missions. This information allows us to select a launch vehicle, which dictates the allowable physical envelope of the stowed satellite.

Before we have a preliminary configuration, identifying and trading options are begun to answer many questions related to the design process, like the method of satellite control, the communication system, the need for a propulsion system, and the total power estimated, which determines the solar panel surface area and the battery size. These and many other questions in designing a satellite are not

G. F. Abdelal et al., *Finite Element Analysis for Satellite Structures*,
DOI: 10.1007/978-1-4471-4637-7_2, © Springer-Verlag London 2013

straightforward. The answer of one depends on several or all of the solutions to the others. Often, we cannot find the best answers to the above questions until we try to configure the satellite. However, to start developing the initial configuration, answers can be estimated to the above questions, so that the key components and their critical characteristics may be identified. By doing so, a preliminary equipment list, which includes information such as quantity, size, mass, and the required power for each component, is generated.

Using this list, the launch vehicle's payload envelope, identified fields of view for sensors and antennas, and basic packaging guidelines, arranging the components, and tying them together with structural load paths can be begun. The resulting configuration is just a starting point for a string of iterations. The process of developing a preliminary satellite design is summarized in Fig. 2.1.

The information needed to begin developing a satellite configuration is concerned with all major design elements which have an effect on configuration. The first significant element is the payload, which is the starting point for satellite design and usually the heaviest components. It is characterized by its size, weight, power, data rates, field of view, thermal interfaces, and other constraints. It determines the satellite attitude, and most probably uses a lot of power. Another element having great effect on a satellite configuration is the mission, which is distinguished by its orbit, reliability, design life, operations concepts, and mission constraints. Orbit defines satellite environments and power-gathering capabilities, while reliability and design life influence the number of components and component size.

Launch vehicle has very important effect on satellite configuration design. It is characterized by environments and constraints which contain envelope, mass properties, fundamental frequencies, and access. The stowed envelope can derive the need for complex deployment mechanisms. Data relay and communications also affect configuration design. They specify the frequency, data rate, hardware losses, and receiver station characteristics. Antennas may need special locations for fields of view, and the transmitter typically must be near the antenna. Another element is attitude control approach, which is categorized into spin-stabilized, 3-axis, and gravity gradient. The control types require different types of actuators and affect the configuration in different ways. Subsystems have great influence on satellite configuration design. Key components must be defined early, and minor components can be added as the configuration matures. Schedule and cost limit the development of technology, so risks, schedule, cost, and technical function must be considered.

Table 2.1 describes a general process for configuring a satellite [1]. Because of unique requirements and equipment, no single process applies to all satellites, but this one should be effective for most programs. The products from this process are:

- Layouts of stowed and deployed configurations, showing the arrangement of equipment and the main structural load paths
- An equipment list that summarizes quantity, size, mass, and power for each component

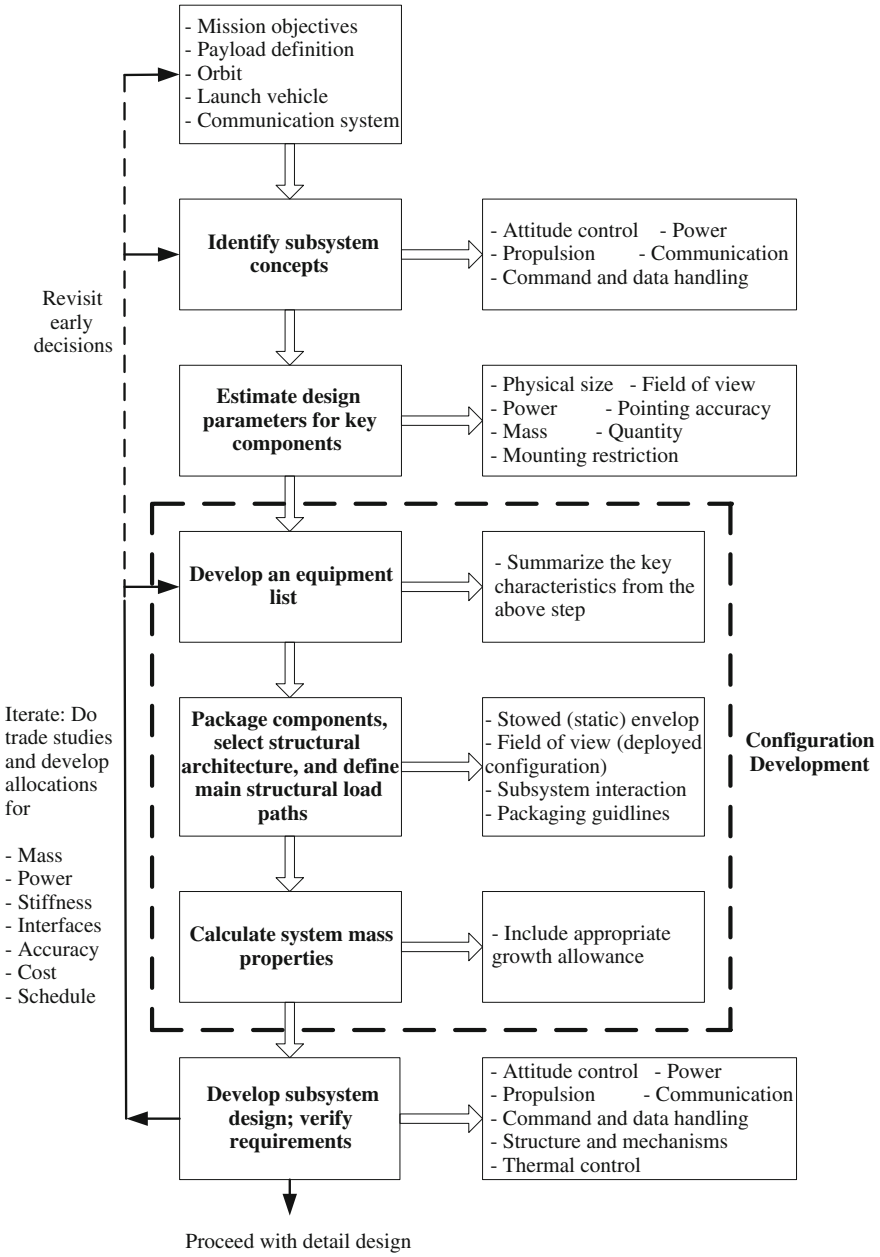


**Fig. 2.1** The process of developing a preliminary satellite design [1]

**Table 2.1** General process for configuring a satellite [1]

| Step | Discussion |
|---|---|
| Determine the best location for the payload | The satellite structure function is to support the payload |
| Sketch a "quick-look" deployed configuration based on the fields of regard for the payload, solar arrays, and communications antenna | A rough concept, based on general guidelines for component locations, allows us to visualize the satellite and identify any potential problems in developing a deployed configuration |
| Fit the payload inside the stowed static envelope and identify the available bus envelope and volume | Compare the available volume with the estimated required volume for an early indication of whether everything will fit |
| Select a body shape and architecture | Decide whether to package components within the body structure or to mount them externally |
| Find stowed locations for deployable appendages and package the larger components | High-gain antennas and solar arrays are usually the most difficult to package. Develop schemes for folding and deploying solar panels, if necessary. Identify any needed mechanisms |
| Package the remaining subsystem components | Use the guidelines for packing and system integration, but recognize that compromises are usually necessary |
| Generate layouts of stowed and deployed configurations | Make reasonably detailed drawing and identify all components |
| Assess high-level subsystem requirements such as field of regard; identify potential problems. | Iterate the above steps, as necessary, but leave all except the simple analyses to subsystem engineers |
| Calculate the satellite's mass properties and update the equipment list | Itemize components so analysts can develop math models. Include an appropriate growth allowance |
| Release the configuration for subsystem trades and analyses | Provide layouts, tabulated mass properties, and an equipment list |
| Continue to develop the configuration with feedback from subsystem trades | Decide as a team how to modify the configuration. Otherwise, something may be changed for the good of one subsystem that is bad for the rest of the satellite |

- Definition of location of satellite components in terms of a reference coordinate system
- A summary of mass properties, moments of inertia, and center of mass for each significant component, and for the satellite as a whole.

This information allows program designers to visualize the satellite and proceed with subsystem sizing and trade studies. Usually, a program develops more than one configuration to enable trade studies. Developing a satellite configuration has no right answer. With multiple iterations and by considering requirements, cost, and schedule, a capable design team will converge to a configuration that is best for the program. This always results in compromises: for the best system, each

subsystem may not be ideal. Reliability and cost are two key considerations in this process, which means we strive for simplicity, the fewest parts, the use of previously qualified components and proven technology, and producible design.

## 2.2 Mission Definition

The design and size of any satellite are highly dependent on the mission goals. Small Sat satellite is intended for earth observation missions. The results of the Earth remote sensing missions are used to find solutions for many problems in several fields. The most informative remote sensing methods are related to an observation by optical unit. Space images with high resolution are of a great interest for national economy and science, because they make possible to compose the detailed maps and track the slightest changes taking place on the Earth. Data acquisition of Earth optical-electronic observation is useful for information support of economic activity, which include agricultural problems, land use, construction activity, environment pollution monitoring and estimation, and manufacture of digital locality maps. It is helpful also for finding solutions for scientific problems.

Most earth–observation missions require low-earth orbits. The payload for Small Sat satellite is a very precise optical unit to image the earth's surface. Mission is intended to cover all the area of Egypt by taking images. To develop a conceptual configuration for Small Sat, mission requirements are identified according to objectives and purposes. Table 2.2 summarizes preliminary mission requirements for Small Sat, which are typical of the information available at the start of the conceptual design.

## 2.3 Satellite Functions

To perform the mission requirements, the satellite performs the following functions:

- Acquisition and transmission of telemetry and signal information and data files to the ground control station
- Reception of command-program information from the ground control station
- Pointing the satellite optic-electronic equipment to certain Earth's surface areas
- Imaging of certain Earth's surface areas
- Coding of information of images obtained and transmission to the ground station

**Table 2.2** Small Sat preliminary mission requirements

| | |
|---|---|
| Mission Related Orbit: | 668 km at 98.085° inclination |
| Design life: | 5 years |
| Communication relay: | Ground station in Egypt |
| Coverage: | Local area of Egypt |
| Payload Instrument: | Multi band earth imager |
| Size: | 0.45 m diameter by 1.1 m length |
| Weight: | 45 kg mass |
| Power: | 100 watts when operating |
| Resolution: | 2.5 m |
| Payload instantaneous field of view: | Nadir viewing with a half angle of 2° |
| Payload field of regard: | half angle of 80 ° from Nadir |
| Pointing accuracy: | ±0.25 ° |
| Position knowledge: | ±1 km |
| Launch Vehicle: Dnepr | |
| Small Sat allowable mass band (includes launch vehicle adapter): | 200–300 kg |
| Spacecraft Derived Requirements Control: | 3-axis (because of off-nadir viewing) |
| Payload duty cycle: | Approximately 12 min per orbit |
| Programmatic considerations: | Low cost with minimal development |

## 2.4 Launch Vehicle Selection

At present, the following methods of orbital injection for small satellites are employed in world practice:

1. Single (solitary) launching with the help of a small launch vehicle
2. Series (group) launching of several satellites with the help of one launch vehicle:
   - Launching as the additional payload together with the main satellite
   - Series launching of the satellites of the same class, “cluster launch”
3. Separation from the main satellite, “baggy back”

In the process of selection, it should be taken into account that the small satellite under development will function on a circular sun-synchronous orbit with altitude of 668 km and mass band of 200–300 kg. Therefore, satellite launching from the main satellite is not acceptable, as the disadvantages related to the latter can affect the launching latency (waiting) time. In addition, the orbit of the main satellite specifies the small satellite orbit. Single launching by using small launch vehicle, like Pegasus, is also not accepted, because costs of the launching services are thoroughly included in the satellite launching costs.

The best way to minimize launch costs is using a launch vehicle which deals with series launching. The most famous launchers in this category are Arian 4, Arian 5, Delta 2, Delta 4, Taurus, and Dnepr. Using Delta 2, Delta 4, and Taurus

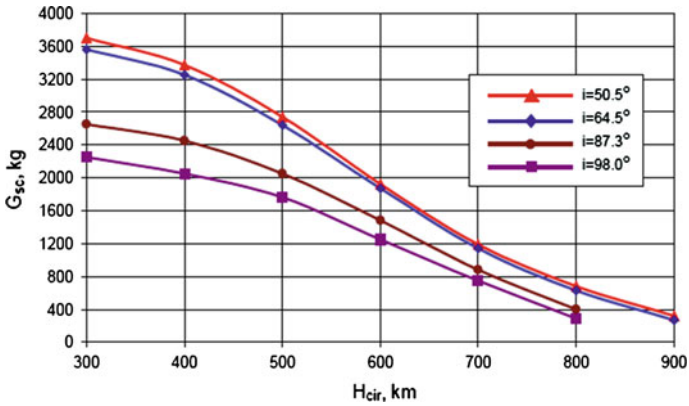


**Fig. 2.2** Mass of LV payloads to be injected by Dnepr into sun-synchronous orbit [2]

launch vehicles require a modification in their interface configuration to provide the possibility of launching of a satellite 200–300 kg, which is unacceptably costly. Arian 4, Arian 5, and Dnepr provide the possibility of launching a satellite of 200–300 kg without modification. All launch vehicle types, except Taurus, assure appropriate orbiting accuracy.

Figure 2.2 [2] shows the total mass of the launch vehicle payload to be injected by Dnepr LV into sun-synchronous orbit at different inclination angles. From the figure, the allowable payload mass of Dnepr LV at an altitude of 668 km with inclination 98$^{o}$ slightly exceeds 800 kg, which is suitable to launch a series or group of small satellites. After comparison based on the above discussion and cost criteria, Dnepr Launch Vehicle is found to be the suitable one to launch Small Sat.

For Dnepr Launch Vehicle, the spacecraft "Small Sat" is installed inside the space head module (SHM). The SHM is composed of the fairing, cylindrical intermediate section, adapter, protective membrane, and gas dynamic shield (GDS) or encapsulated payload module (EPM). Layout schematic of the standard length SHM (with both GDS and EPM) is shown in Fig. 2.3. SHM design allows for multi-tier spacecraft layout. One of the options for such layout is shown in Fig. 2.4.

## 2.5 Satellite Composition

A satellite consists of a payload, which is the mission-specific equipment, and a collection of subsystems [1]. A subsystem is a group of components that support a common function. There is a difference between the payload and the rest of the satellite subsystems, because the payload is typically unique for a given mission, whereas the other subsystems may be able to support different missions. In the next section, a closer look is provided at essential subsystems, focusing on features and

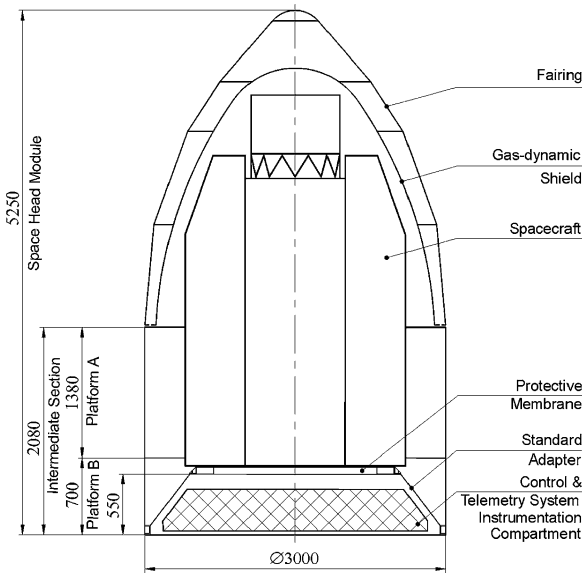


**Fig. 2.3** SHM standard length [2]

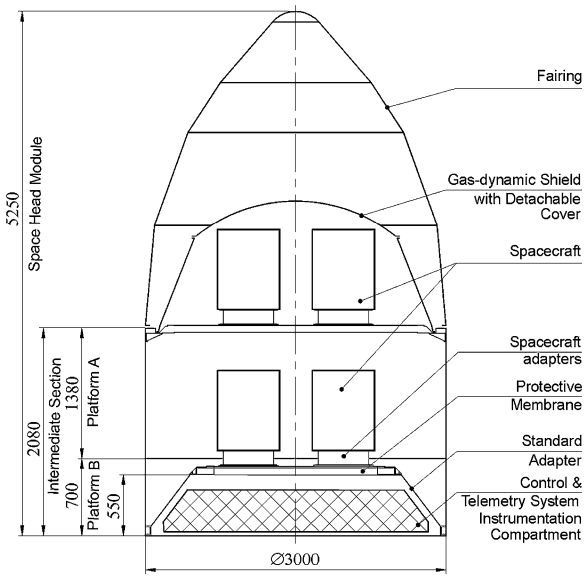


**Fig. 2.4** SHM with 2-tier Layout [2]

components that most influence Small Sat's configuration. Satellite consists of the following subsystems:

1. Payload
2. Attitude determination and control subsystem (ADCS)

3. Communications Subsystem
4. Platform command & data handling subsystem (PCDHS)
5. Power Subsystem
6. Thermal Subsystem
7. Structures and Mechanisms Subsystem

Table 2.3 shows the initial equipment list for Small Sat. Quantity, physical size, and mass in (kg) of each component are included. The selection of each component depends on the previous discussion of satellite functions and subsystems identification. The mass shown for the launch vehicle adapter is an estimate. Satellite structural modules include the primary (body) structure, brackets of equipments, and mechanical fastening such as bolts, nuts, and rivets. Their estimated mass is (41 kg), which is about 20 % of the satellite total mass not including the launch vehicle adapter. This is a reasonable estimate based on historical averages.

## 2.6 Mounting Restrictions and Integration Constrains

This section provides guidelines for arranging a satellite's components, and explains how subsystems affect the satellite configuration. These guidelines can be considered as requirements, so they should be taken into consideration during the configuration process of Small Sat.

### *2.6.1 Payload*

The payload of Small Sat is a multi-band earth imager (MBEI), which is a high precision electromechanical optical unit. This type of payload needs key requirements; often include field of view, pointing accuracy, stability, and thermal isolation. From the previous data mentioned in Table 2.3, MBEI is heavy and large, thus it is the main component affecting the configuration design. Because MBEI requires a field of regard, the most common location for it is the forward end of the satellite, opposite the interface to the launch vehicle. Although MBEI is heavy, this location is often chosen because

- It is easier to provide a clear field of view at this end
- It is sensitive to shock, so it is kept away from ordnance at the LV separation interface
- Structural load during launch is highest at the LV interface, and it is hard to keep large and sensitive payload out of the primary load path

**Table 2.3** Small Sat initial equipment list

| Subsystem and component | Quantity | Size (mm) | Total Mass (Kg) |
|---|---|---|---|
| *Payload* | | | |
| Multi-band earth imager | 1 | D 450 × 1100 | 45 |
| Payload CDH unit | 1 | 230 × 220 × 160 | 7.2 |
| MEI signal processing unit | 2 | 300 × 200 × 120 | 3.7 each |
| *ADCS* | | | |
| Star sensor | 1 | 375 × 215 × 184 | 4 |
| Angular velocity meter "Gyro" | 4 | D 150 × 47 | 1 each |
| Interface unit for each gyro | 4 | 101 × 81 × 56 | 0.92 each |
| Magnetometer | 1 | 150 × 90 × 90 | 1.5 |
| Magnetorquer | 3 | D 22 × 170 | 0.38 each |
| Reaction wheel | 4 | 195 × 195 × 89 | 3.3 each |
| *Communications subsystem* | | | |
| X-band equipment | | | |
| X-band electronic module | 1 | 380 × 315 × 60 | 3.8 |
| X-band antenna | 1 | D 243 × 120 | 1.6 |
| S-band equipment | | | |
| S-band electronic module | 2 | 380 × 315 × 30 | 2.2 each |
| S-band conical antennae | 2 | D 100 × 112 | 0.27 each |
| S-band dipole antenna | 1 | D 100 × 44 | 0.13 |
| GPS receiver | | | |
| GPS electronic module | 1 | 380 × 315 × 30 | 1.1 |
| GPS antenna | 2 | D 70 × 55 | 0.15 each |
| *Platform CDHS* | | | |
| On-board digital computing complex | 3 | 380 × 315 × 38 | 3.7 each |
| Telemetry module | 1 | 210 × 155 × 95 | 2.8 |
| *Power subsystem* | | | |
| Battery cell module | 1 | 430 × 280 × 130 | 16.5 |
| Power-conditioning unit (PCU) | 1 | 380 × 315 × 65 | 3.6 |
| Cells leveling unit (CLU) | 1 | 380 × 315 × 40 | 1.9 |
| Solar array panels | 4 | 3.2 $m^2$ total area | 6.8 |
| Cabling | set | – | 1.5 |
| *Thermal subsystem* | | | |
| Heat shields | – | TBD | 3.6 |
| Insulation, coatings, and sensors | set | – | 1.5 |
| *Structure and mechanism subsystem* | | | |
| Satellite structural modules | – | TBD | 41 |
| Rotation mechanism | 4 | TBD | 1.7 |
| Locking and releasing mechanism | 4 | TBD | 0.5 |
| Separation transducer | 2 | TBD | 0.1 |
| Satellite total mass | | | 205 |
| Launch vehicle adapter | 1 | TBD | 20 |
| Total mass (including LV adapter) | | | 225 |

All objects must stay out of the payload's field of view. The only practical way to orient the payload to its target is to rotate the satellite. This is usually the simplest approach, because fixed mounting of the payload is more easier than using a gimbaled mechanism. A high precision MBEI has requirements for accurate pointing. This means the mounting structure must be stiff and provides direct load path into the satellite's primary structure. Structural distortions between the payload and the ADCS sensors must be minimized. Distortions can result from on-orbit structural vibration, on-orbit thermal effects, and any yielding or joint shifting during launch or ground operations. Making the mounting structure stiff avoids problems from on-orbit vibration and lunch effect. Thermal deformation can be controlled by selecting the right materials and by controlling temperatures.

### *2.6.2 Attitude Determination and Control Subsystem*

The selected method of control drives the satellite's shape. The satellite configuration, in turn, can derive the types and sizes of actuators. Small Sat is preferred to be symmetric, this will reduce aerodynamic drag and solar radiation pressure, hence a net torque. To minimize this torque, the Small Sat's center of mass should be as close as possible to its center of pressure, which is the centroid of the satellite's projected area. This is provided also by creating a symmetrical front area, so four solar arrays, symmetrical about the satellite's center of mass, will be used. Symmetry also reduces gravity-gradient torques, as does a compact shape.

The configuration of tree-axis control satellite, like Small Sat, is the most severe constraint for ADCS and structural design. Making appendages of Small Sat as short as possible makes it easier to keep natural frequencies above the control system's bandwidth. This will avoid resonance phenomena which lead to structural fracture.

The star sensor of Small Sat requires a narrow field of view, so it must be protected from any obstacles. Bright sunlight can damage the star sensor or causes it to shut down. Therefore, the star sensor mounting will be turned by a certain angle to protect it from sunlight. The Magnetometer must be installed at enough distances from high magnetic field components like ADCS actuators, reaction wheels, and magnetorquer. Alignment is very important for ADCS sensors, so they are grouped on one platform, which is stiff and thermally stable to reduce errors from distortions.

For reaction wheels, a common approach is to align them with the satellite axes and add a wheel at the critical axis to provide redundancy. If any one wheel fails, the redundant wheel can compensate. The Y-axis shown in Fig. 2.5 is the most critical one for the stability of Small Sat, so the redundant wheel is installed on the Y-axis. The same approach is followed for the angular velocity meters "gyros", but the redundant one is added at a skewed axis. The configuration of Small Sat

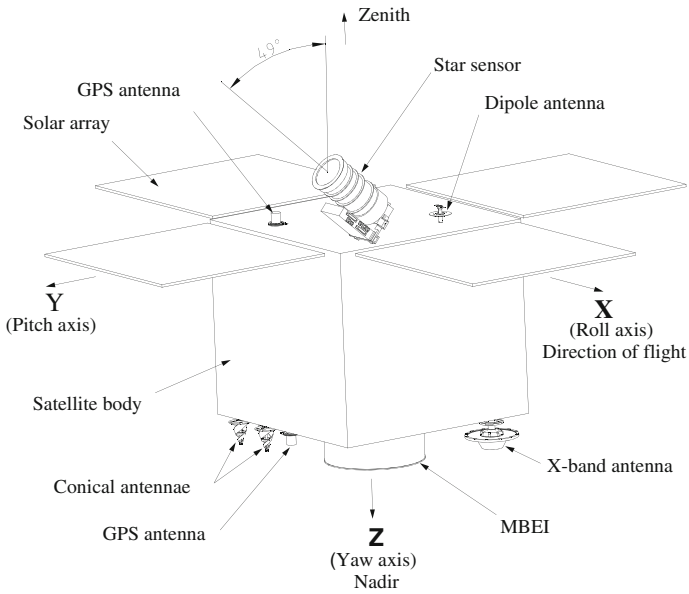


**Fig. 2.5** Quick-look for on-orbit configuration of Small Sat

must be developed with a proper mass distribution to provide stability conditions. Therefore, the moment of inertia about the critical Y-axis must be greater than their about the velocity direction axis "X-axis", which is also greater than their about the nadir "Z-axis".

### *2.6.3 Communications Subsystem*

The communication components important to the configuration designer are antennas and power amplifiers. All antennas of Small Sat require a clear field of view. The S-band omni antenna consists of one conical antenna and a dipole antenna, and is used to ensure initial ground communications regardless of the satellite's orientation. So one of them is mounted at the aft end and the other is at the opposite side. The second S-band conical antenna is mounted at the forward end to provide in-orbit communications with the ground station. A high gain antenna of Small Sat "X-band antenna" is mounted also at the forward end of the satellite. The GPS receiver antenna consists of two similar antennas; one of them is installed at the aft end and the other at the opposite side.

Another key consideration is the proximity of the power amplifier to the communications antenna. The amplifier of each antenna in Small Sat is mounted at the related electronics module. To reduce signal losses, each electronics module is installed as close as possible to its antenna. This also leads to minimize the length

of the coaxial cables. Brackets are used to mount all antennas except the X-band antenna, because the wave pattern is affected by the distance between the antenna and its mounting surface.

### *2.6.4 Platform Command & Data Handling Subsystem*

The electronic modules of PCDHS in Small Sat, especially on-board digital computing complex (ODCC), are important for the configuration designer. These modules are dense and therefore heavy, so the best location for mounting them is near the aft end. PCDHS equipment will be electrically connected to virtually all of the satellite's nonstructural components. By grouping electronics, cabling losses and mass can be minimized.

### *2.6.5 Power Subsystem*

Small Sat configuration is strongly influenced by the power subsystem components, especially the solar arrays. The design of solar arrays is based on the satellite's power requirements, the orbit altitude, sun-angle conditions, the method of attitude control, and mission and payload requirements. For Small Sat, fixed solar panels mounted on the satellite body surfaces are not used, because Small Sat needs relatively high power with respect to the available surface area. Heat rejection can be another problem of using fixed solar panels. Therefore, four deployed-fixed solar panels are used to supply power for Small Sat. A deployed-fixed solar panel is one that is stowed in one location for launch, and then deployed to a fixed position in space. Rotation mechanisms are used to rotate solar panels and provide fixation into specific positions in space. Locking and releasing mechanisms are needed to fix the solar panels during launch, and then release them at space.

In defining deployed locations for solar panels, shadows from other components should be avoided. Therefore, in Small Sat, solar panels and rotation mechanisms are mounted at the aft end. This also reduces the overall structural loading by keeping the mass of both solar panels and rotation mechanisms near the launch vehicle interface. This minimizes the cable runs to battery, which is also mounted near the aft end of the satellite. Flat solar arrays made of lightweight honeycomb sandwich are the most common and easiest to manufacture. Solar arrays are major contributors to a deployed satellite's modes of vibration, so these should be very light and stiff, with natural frequencies high enough to avoid interaction with the control system. During launch, acoustics combined with transient loads usually cause the highest loads in the solar panels and mechanisms.

The best location for the battery is dictated by weight, temperature sensitivity, and cabling. The battery of Small Sat is heavy, so it should be packaged as near as possible to the launch vehicle interface. The battery also needs a location with temperature that is uniform and somewhat low (5–20$^{o}$) to maximize the depth of discharge. Thus, it must be protected from direct exposure to the sun or earth. Because battery generates heat during use, it needs a lot of radiator area to maintain low temperatures. The battery is mounted near large power consumers and near the solar arrays to minimize cabling losses and weight. The power subsystem electronic components in Small Sat are the power-conditioning unit (PCU) and cells leveling unit (CLU), which control and distribute power. They are typically dense and heavy, so the aft end near battery is the best location to mount them. Cabling of all satellite subsystems is rather heavy. The main target of reducing cable mass can be achieved during the configuration process by mounting the interact components as close as possible in a compact space, and by co-locating items with many interconnections. The configuration should provide access for installing cabling and connectors. When locating components, free spaces must be provided for the necessary bends of cables and mate electrical connectors.

### *2.6.6 Thermal Subsystem*

Designing the thermal control subsystem begins with the satellite's configuration. Our goal is to use passive thermal control. Doing so requires proper location of powered satellite components and effective use of radiators, insulations, and coatings. The design of Small Sat configuration aims at achieving that goal. The best location for heat-generating components and radiators is the side of the satellite with the least sun exposure. Also for low earth orbit, like Small Sat's, heating can be minimized by shading components from planetary emissions and facing radiators away from earth. Therefore, heat shields are used in Small Sat to cover and protect the internal components from environmental effects.

### *2.6.7 Structures and Mechanisms Subsystem*

The configuration of a satellite's primary structure can be characterized by its architecture, type, and the packaging scheme. This section introduces alternate architectures and packaging approaches. Chapter 1 describes types of structures, materials, and attachments. The shape of the body's cross-section characterizes the body architecture, which is characterized also by whether the body is open or closed. Cylindrical, square, rectangular, hexagonal, and cruciform cross-sections have all been used for satellites.

Open-architecture configurations, which include frames and trusses, have satellite equipment mounted externally on structural members or panels. Closed-architecture

configurations enclose the equipment within the body structure. The best type of body architecture depends on the mission and the available packaging volume. Mechanisms are also a major consideration in configuring a satellite. They must be designed to perform their functions under hostile conditions without maintenance. Mechanisms add complexity and risk, so their number should be reduced and they should be kept as simple as possible.

### *2.6.8 Systems Aspects of the Satellite Configuration*

The system requirements and constraints that influence a satellite's configuration are reliability, design life, maintainability, cost, schedule, and environments. To satisfy reliability requirement, which is specified from customers, the program allocates higher reliability values to the subsystems and key components, such as mechanisms. The target reliability can be achieved by using high-grade (space) components and providing redundant or backup components. Redundancy will at most influence the configuration simply because of the extra components.

Satellites have a range of design lifetimes, which depends on the satellite mission and orbit. As design life increases, solar arrays area and battery capacity must grow. Design life also affects structures and mechanisms, but usually more in details than in features that affect the satellite configuration. The maintainability of a satellite is the ability to access or service its components during integration and test. This requirement should be taken into account during configuration development, as well as cost and schedule.

Finally, launch and space environments drive the sizes of structural members and strongly affect the satellite configuration. Sometimes satellite configurations appear to be ideal from the nonstructural subsystems point of view, but it is very difficult to design a structure for these configurations which withstand launch loads without being too heavy. For Small Sat, many of the guidelines mentioned above in this section will conflict with one another. Therefore, subsystem concerns must be compromised to optimize the satellite or the system, which means finding the best design given all program considerations. The goal is to arrive at a cost effective design with compromises that do not affect or risk mission objectives.

## 2.7 Configuration Development Process

In this section, a conceptual configuration for Small Sat will be developed. To perform this, Fig. 2.1, which summarizes the general process of developing a preliminary satellite design, should be followed. Section 2.2 through Sect. 2.6 discuss the initial data and requirements needed to begin developing Small Sat configuration. Table 2.2 summarizes the preliminary mission requirements for Small Sat, and Table 2.3 summarizes the initial equipment list. Now the process is

to package components, select suitable structural architecture, and define main structural load paths. This will be done generally by following the steps in Table 2.1, which describes a general process for configuring a satellite. Products of this phase will be layouts of stowed and deployed configuration. The calculation of mass properties will be discussed in Sect. 2.8. Normally, the conceptual design phase results in several configurations, but only one will be presented to limit work efforts.

From Table 2.2, there are no outstanding requirements that will dictate a revolutionary design or new technology. From Table 2.3, the total predicted mass of Small Sat is 225 kg, including launch vehicle adapter, which is within the allowable mass band (200–300 kg) and leaves a high margin, based on the Dnepr's payload capability of 800 kg for Small Sat selected orbit. The initial equipment list indicates that there are some assumptions already made regarding the satellite's deployed configuration. The 3.2 $m^2$ of solar-array area is based on the assumption of deployable-fixed solar arrays. Thus, rotation mechanisms are needed to deploy and fix solar arrays in space.

### *2.7.1 A Quick Look at On-Orbit Configuration*

Using this information and the payload requirements, a "quick-look" can be sketched for on-orbit configuration, as shown in Fig 2.5. Because the MBEI is heavy and bulky, it is located at the middle of the satellite and directed to the earth "Nadir", which provides a clear field of view. This location makes the mass distribution as symmetric as possible. Moreover, it enables mounting the payload directly along the primary load path, which reduces the shock effect and distributes structural loads uniformly during launch.

Since the high gain antenna (X-band antenna) communicates through a ground station, it needs to be fixed at the forward end and directed to the earth "Nadir". A dipole antenna of the S-band equipment and one of the GPS receiver antennae are mounted at the aft end to be directed to "Zenith", which is the opposite direction of "Nadir". The other GPS receiver antenna and two conical antennae of the S-band equipment are mounted at the forward end to be directed to "Nadir". Using symmetric solar arrays about the satellite's center of mass minimizes environmental disturbances. They will be most efficient if they protrude from the satellite near the aft end along the axis perpendicular to the orbit plane. Determination of how many solar array panels should be used depends on the configuration shape, method and location of stowed panels, and mass properties of the final configuration. Four solar arrays with 3.2 $m^2$ total area are assumed to be mounted on the initial configuration. To provide symmetrical shape, each two solar arrays located at opposite sides are identical.

The star sensor requires a narrow field of view to identify the relative location of certain stars, so it is located at the aft end and directed toward the horizon. The star sensor mounting is turned by $49^o$ from Zenith direction in the positive Y-axis

to protect it from sunlight. This quick-look configuration establishes only the general placement of major external components. It does not address structural load paths, the shape and size of the solar panels, or the satellite's physical dimensions and its internal arrangement.

### 2.7.2 Packaging Envelope

The equipment list (Table 2.3) reflects the need for redundancy of certain items in order to achieve the required design life with high reliability. The MBEI is relatively bulky and large, and the solar arrays require considerable surface area. All these factors indicate that packaging volume in the Dnepr launch vehicle will probably be a driving consideration. Thus, the stowed configuration should take the first attention.

Dnepr launch vehicle is designed to perform series launching for several small satellites. Hence, Small Sat will be mounted inside the Dnepr fairing envelope with several other satellites. The main goal during packaging the satellite is to minimize its volume and design it as compact as possible. For Dnepr launch vehicle, the payload "satellite" envelope is a volume within the SHM, which is designed for accommodation of spacecraft. Spacecraft dimensions (including all of its protruding elements) must fit within the specified payload envelope, given all possible deviations and displacements from the nominal position during ground testing and flight phases. The size of the payload envelope within the standard SHM is shown in Fig 2.6.

### 2.7.3 Body Shape

The main considerations in selecting a body shape for Small Sat are [1]:

Packaging consideration:

- Enough volume to contain the subsystem components
- Ability to package appendages as well as the body within the fairing

Structural considerations:

- Efficient structural load paths between the payload and launch vehicle
- Compatibility with the payload and launch-vehicle mechanical interfaces

In general, a body with a large cross-section is better for equipment packaging, whereas a narrow body makes it easier to stow the solar arrays and simplifies the design of the launch-vehicle adapter. For Small Sat, a large cross-section is selected, because it is more effective in fixation of payload, which is heavy and bulky. In addition, it reduces the bending loads at the launch vehicle interface. Moreover, it improves the fundamental frequencies and the mode shapes of the

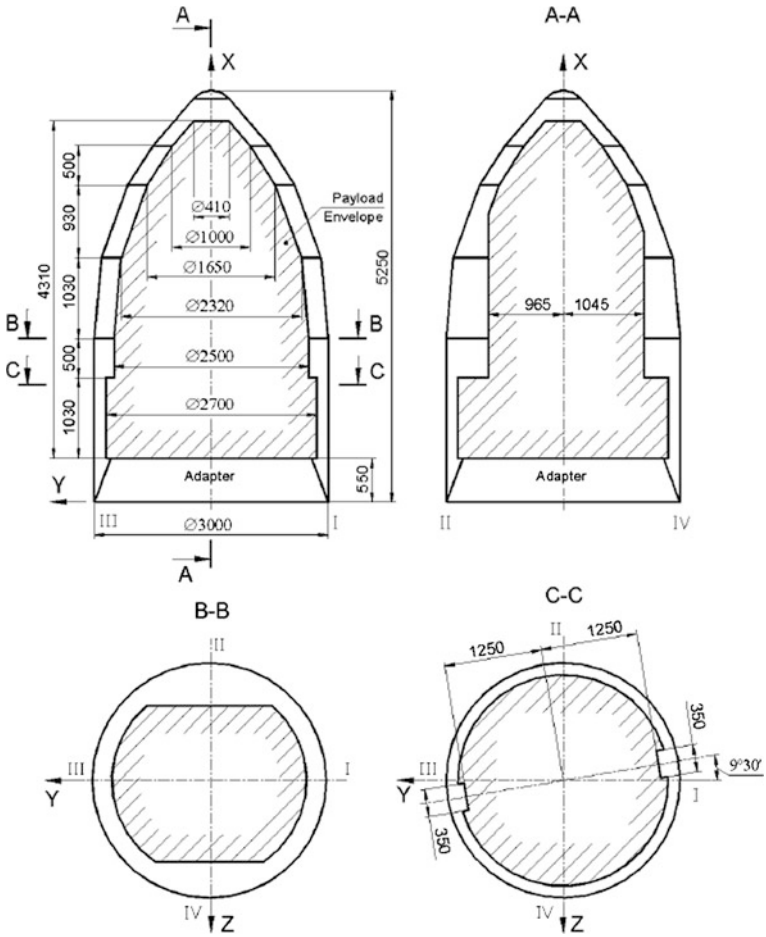


**Fig. 2.6** Payload envelope available within SHM with standard adapter [1]

satellite primary structure. Because the packaging volume is tight, a combination between open and closed architecture will be used for the body structure, which will more efficiently use volume. This type of architecture combines the advantages of both open and closed one. It provides greater bending stiffness for Small Sat because of its wider cross-section. Moreover, components can be mounted internally and externally on structural members to provide the best arrangement with minimum volume.

Several possible body shapes can be used as a packaging envelope. Circular, square, rectangular, hexagonal, and cruciform cross-sections have all been proposed or used for satellites. The first criterion for selection is that the shape must be able to contain the largest packaged components, which for Small Sat are the MBEI, Battery, and the electronics modules. All options except cruciform pass this test.

A circular shape will also be a difficult choice because components require flat mounting surfaces. In addition, it will be more difficult to package flat solar arrays on a cylindrical body. The hexagonal shape is reliable, but is more complex in configuration design. Moreover, it cannot provide the minimal volume criterion for Small Sat, because it produces relatively large unused spacing inside the configuration envelope. Thus, only square and rectangular shapes can be considered to provide Small Sat packaging in minimal envelope. However, they present structural problems at the adapter interface where launch loads are highest. These problems can be solved during structural design phase by designing a suitable launch vehicle adapter with sufficient number of fixation connections. The selection between square and rectangular shapes depends on the packaging approach.

### *2.7.4 Packaging Approach*

The next step is to find the packaging approach that will provide the most surface area for mounting components. From the previous discussions, the Small Sat primary structure is a combination between open and closed architecture with square or rectangular shape, so components can be mounted internally and externally on structural members. The best packaging option is enclosing the MBEI, which is the largest component, within the primary structure, while other components can be mounted externally on structural members. The primary structure for Small Sat consists of the main load path structure, which is covered by two plates at the aft and forward ends. Figure 2.7 illustrates the primary structure of Small Sat.

The main load path structure encloses the payload, so it should take suitable shape and dimensions to provide mounting the payload inside it and the rest of equipment outside. The square shape is the best choice for the main load path. The two plates covering the main load path provide enough surface area to mount the external components. The first plate, which connects the main load path structure to the launch vehicle adapter, is called the base plate, while the other plate at the forward end is called the mounting plate. This plate should contain a suitable hole to pass the MBEI forward end. Packaging the rest of equipment on the main load path structure decides the final shape and dimensions of the two plates. The shape can be square or rectangular, while the outer in-plane dimensions should be the same with different thicknesses. The outer surface of the mounting plate carries the components that are directed to the earth. These components are the X-band antenna, one of the GPS receiver antennae, and two conical antennae of the S-band equipment. On the other hand, the outer surface of the base plate, which is connected to the launch vehicle adapter, carries the other GPS receiver antenna and the dipole antenna of the S-band equipment. The inner surfaces of both base and mounting plates are suitable areas for mounting other components.

As mentioned before, the total area of the required solar arrays is 3.2 $m^2$, which is divided into four solar arrays. Each solar array is connected to one side of the

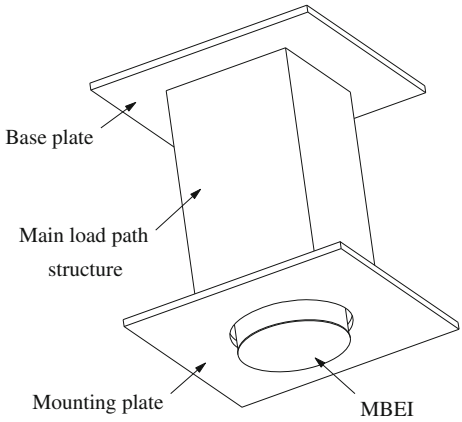


**Fig. 2.7** Primary structure of Small Sat

satellite body by a single rotation mechanism, which is fixed at the outer surface of the base plate. Rotation mechanism provides a fixed position for one deployed solar array where the angle between each solar array and the satellite body equals 90°. Stowage of a solar array is done by a locking mechanism, which is mounted at the outer surface of the mounting plate. This is done during transportation and launching process.

At this time, rough concepts have become clear for the payload, satellite body, communications antennae, and solar arrays. Packaging the remaining components is the next step, which is done by using the guidelines presented in Sect. 2.6. Mounting restrictions and system integration constraints should be taken into account during this step too.

A good starting point is to establish locations for the sensitive equipment, which are usually the most difficult to fit. This equipment is the ADCS sensors and actuators, which require accurate mounting positions. Control sensors must be mounted on a stiff, thermally stable platform, and as close as possible to the payload. Thus, a basis block case is used as a stiff and thermally stable platform to group all ADCS equipment and the payload. The components mounted on the basis block case are MBEI, star sensor, four angular velocity meters, four interface units, magnetometer, three magnetorquers, and four reaction wheels. The best location to mount the basis block case is at the middle of the main load path structure. This location provides fixing the payload directly on the main load path. In addition, the star sensor can be directed toward the horizon and protected from sunlight. A proper mass distribution for Small Sat configuration will be provided, which assists stability conditions. The design of the basis unit block should provide mounting requirements and mechanical interfaces with the components. Therefore, it should contain enough surfaces to mount the components on three perpendicular planes. The basis block case consists of the basis plate and four walls connected together to produce an assembled structure as shown in Fig. 2.8

The next step is to present the optimum arrangement of the equipment that should be mounted on the basis block case. The total assembly produced from

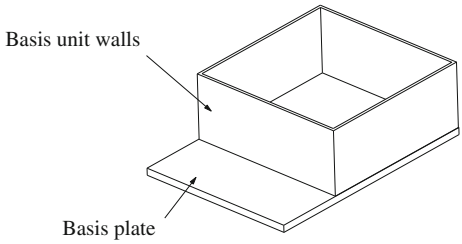


**Fig. 2.8** Basis block case of Small Sat

grouping the basis block case and its equipment is called the basis unit block. Computer aided design can be invaluable for identifying interferences and trying various arrangements for equipment, so Mechanical Desktop computer package (MDT) is used to issue the current configurations.

Before starting the configuration process of the basis unit block, there are some constraints which should be taken into account. The star sensor must be turned by $49^{o}$ from Zenith direction in the positive Y-axis. One of the angular velocity meters (gyro) is redundant, which requires to be mounted at a skewed axis. Therefore, two brackets are designed to provide mounting constraints for both star sensor and the redundant gyro. To minimize the required surface area for mounting equipment, another bracket is used to collect the three pieces of magnetorquers in three perpendicular axes. Each angular velocity meter must be connected to one of the interface units, so each pair is located as close as possible to each other to reduce cabling lengths. The magnetometer must be installed at sufficient distances from high magnetic field components, so a distance not less than 0.6 m must separate it from magnetorquers, and not less than 0.3 m from the nearest reaction wheel. Figure 2.9 shows the final packaging arrangement for the basis unit block of Small Sat.

By reviewing Fig. 2.9, the basis plate carries the star sensor with its bracket, magnetorquers with their bracket, and the Z-direction reaction wheel on one side, while the other side carries MBEI, Z-direction gyro, skewed gyro with its bracket, and interface unit of skewed gyro. The first wall located at the positive Y-axis carries two reaction wheels in the Y-direction, one of them acting as a redundant. The second wall located at the positive X-axis carries the X-direction reaction wheel, X-direction gyro, and the interface unit of the Z-direction gyro. The third wall located at the negative Y-axis carries the Y-direction gyro, and both interface units of Y-direction gyro and X-direction gyro. The magnetometer can be mounted directly on the basis plate or on the third wall with the help of a bracket. The first idea is more reliable because using a bracket will decrease mounting accuracy of the magnetometer. Therefore, the basis plate should be designed to provide high accuracy mounting for the most critical equipments like MBEI, star sensor, and magnetometer. It is clear that there is no equipment mounted on the fourth wall located at the negative X-axis. The reason for this is to produce a free space for other equipment which is relatively big and need special constraints on their locations.

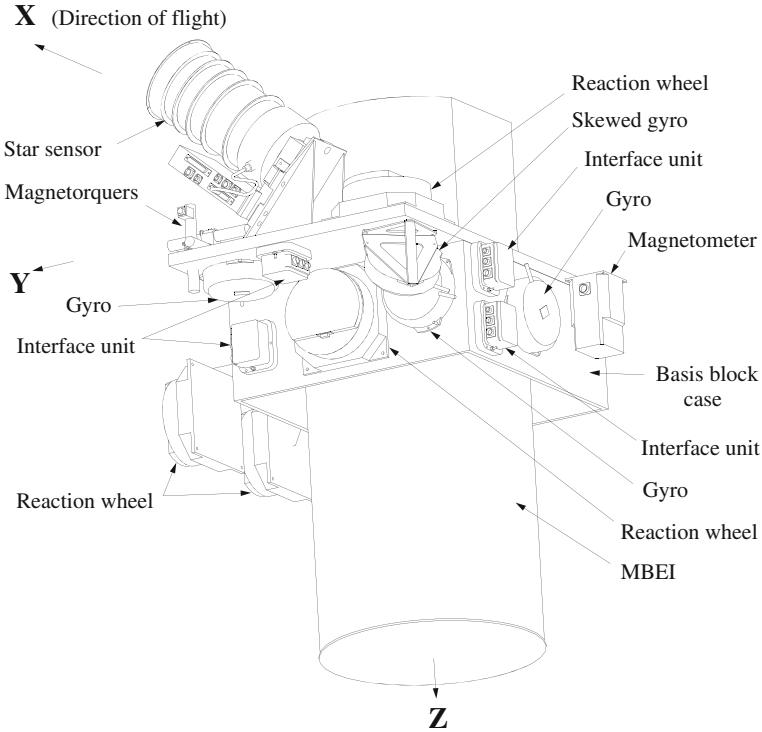


**Fig. 2.9** Final packaging arrangement for the basis unit block of Small Sat

The next step is to complete the main load path structure and find suitable surfaces to mount the remaining equipment. Two frames can be used to connect the basis block case with both base and mounting plates, so they have suitable shape and size to enclose the payload inside. Each frame consists of four plates connected together to form a square cross-section, which provides integrity with the basis block case. The first frame that connects the basis block case with the base plate is called the upper frame, while the other that connects the basis block case with the mounting plate is called the lower frame. Both upper and lower frames provide enough area on their external surfaces to mount some of the remaining equipment. In addition, the inner surfaces of both the base and mounting plates can be employed to mount the rest of the equipment. Figure 2.10 illustrates the location of both upper and lower frames.

The battery is considered one of the most difficult equipment to fit inside the satellite because it is heavy, large, and needs a special location protected from direct exposure to the sun or earth. Moreover, it should be packaged as close as possible to the launch vehicle interface and near large power consumers and the solar arrays. The power subsystem electronic component, PCU and CLU, should be mounted as close as possible to the battery. Therefore, Small Sat battery will be

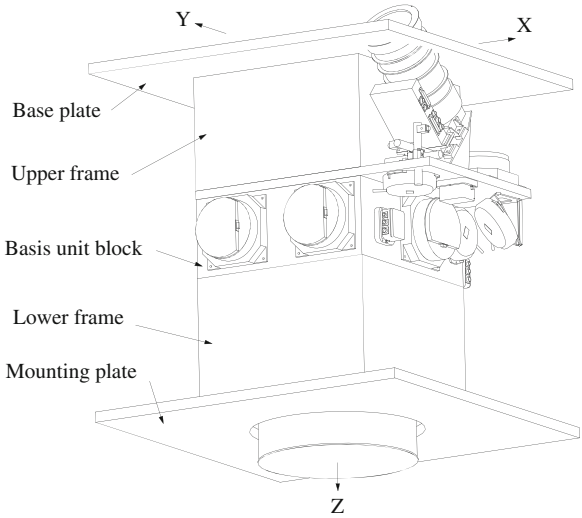


**Fig. 2.10** The location of both upper and lower frames

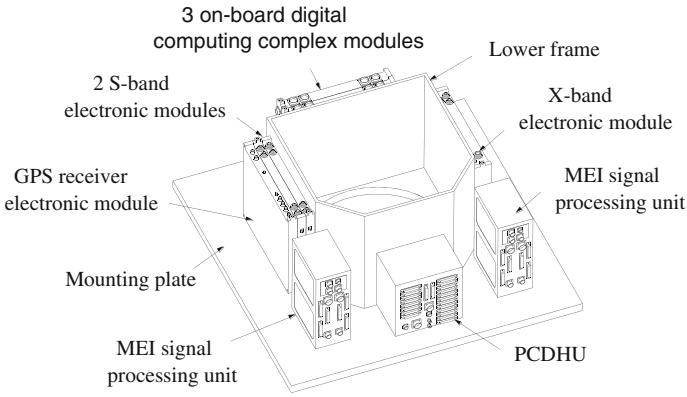


**Fig. 2.11** The modified square cross-section lower frame

mounted on one of the external surfaces of the upper frame. By reviewing Fig. 2.10, there are only three faces of the upper frame which can carry the battery because the fourth one is occupied by the star sensor. From the point of view of thermal control, the best location for the battery is on the negative X-axis face of the upper frame. This location provides uniform and low temperature and a lot of radiator area to maintain this condition. The remaining two faces of the upper frame in Y-axis are preferred to be free to make room for the MBEI connectors. To minimize cabling length, PCU and CLU are mounted at the same side of the battery. They are packaged together to save mounting surfaces and provide

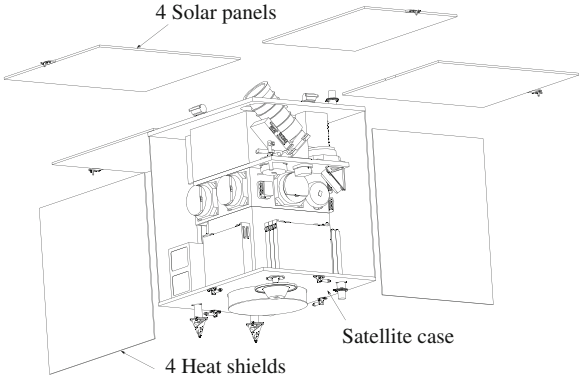


**Fig. 2.12** The packaging arrangement of the conceptual configuration

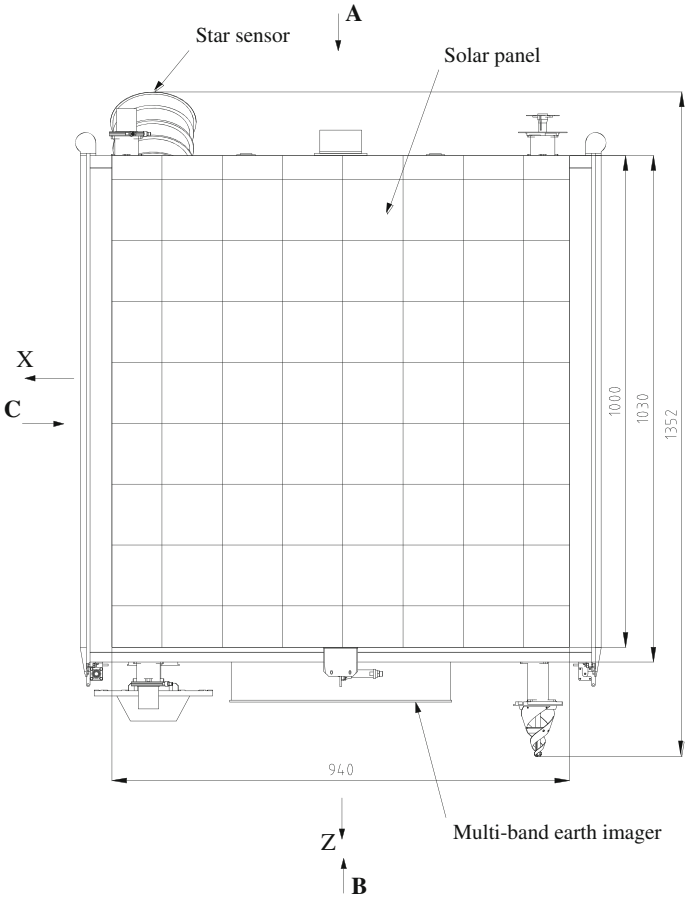


**Fig. 2.13** General view of the satellite in stowed configuration in the Y-direction

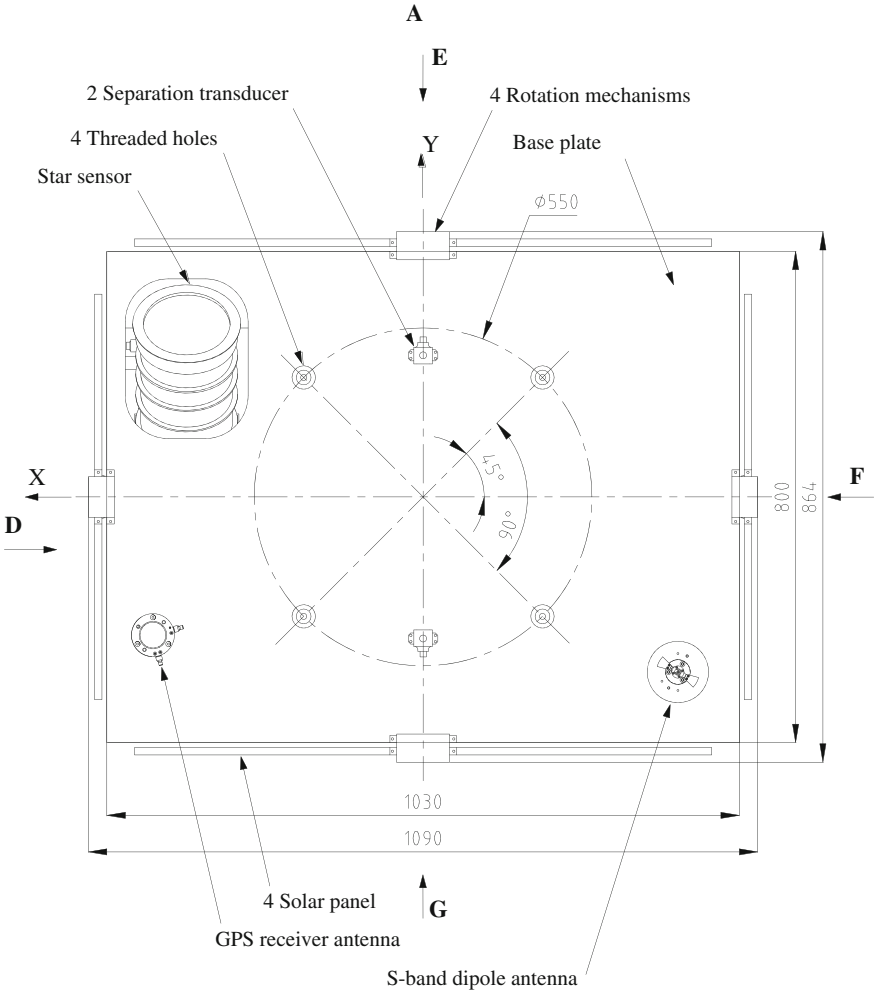


**Fig. 2.14** General view of the satellite in stowed configuration in the Z-direction

efficient volume usage. So they are fixed jointly on the basis block case and the lower frame. Hence, the fourth wall of the basis block case is employed.

One of the main objectives in the configuration process is to make the design and mass distribution as symmetrical as possible, so the arrangement of the remaining equipment should follow this concept. Three faces of the lower frame have already been used as mounting surfaces, while the fourth one in negative X-axis is partially occupied by the power subsystem electronic modules, PCU and CLU. The first face located at the positive Y-axis carries the X-band electronic module, while the second face located at the positive X-axis carries the ODCC, which consists of three identical modules. Two S-band electronic modules and

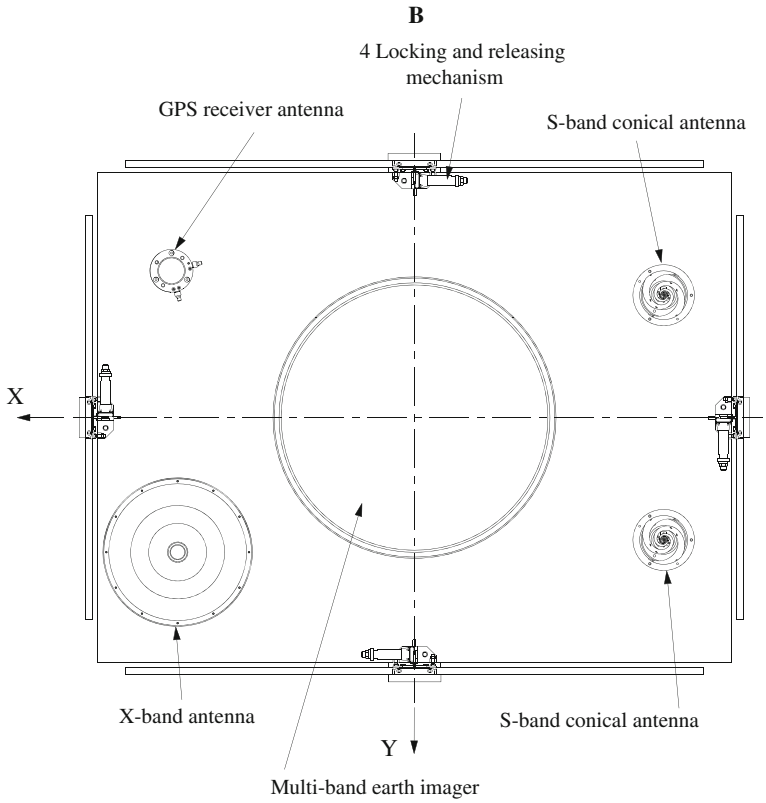


**Fig. 2.15** General view of the satellite in stowed configuration in the opposite Z-direction

GPS receiver electronic module are packaged together and mounted on the third face located at the negative Y-axis.

The payload command & data handling unit (PCDHU) and two identical multi-band earth imager signal-processing units should be located as close as possible to each other to minimize cabling length, so they are mounted at the inner surface of mounting plate. They are located at the negative X-axis area of the mounting plate, thus they occupy the remaining area of the fourth side of the lower frame. To provide symmetry, PCDHU is located at the middle between the two MBEI signal-processing units. The shape of the lower frame will be changed from square cross-section to a modified square one to provide minimal occupied volume. Figure 2.11 illustrates the modified square cross-section lower frame. Telemetry module is mounted at the inner surface of the base plate at the positive X-axis area.

After mounting all main equipment inside the satellite, both base and mounting plates have a rectangular shape with the same outer dimensions. Final dimensions of the four solar panels should be selected to be suitable for packaging. Therefore, there are two groups of solar panels; each one of them consists of a pair of panels located at opposite sides. The dimensions of each panel of the first group are

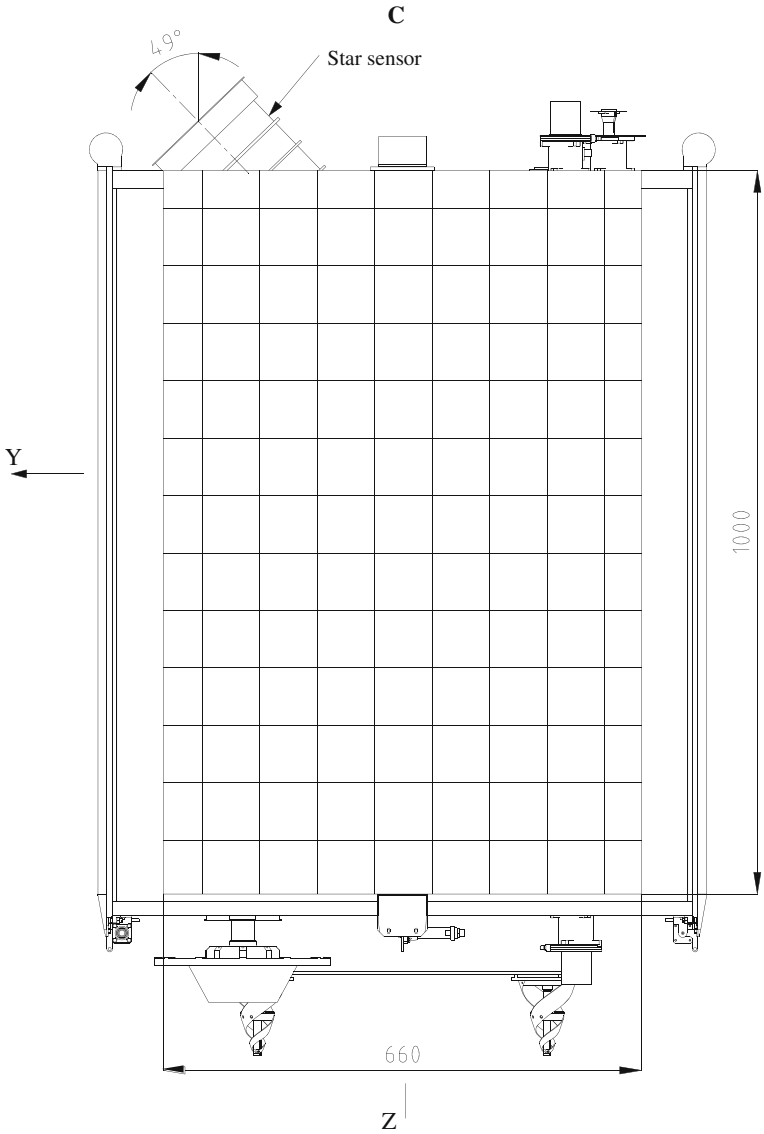


**Fig. 2.16** General view of the satellite in stowed configuration in the opposite X-direction

940 × 1000 mm, while those of the second one are 660 × 1000 mm. The thickness of all solar panels is 12 mm. According to the different dimensions of solar panels, two different rotation mechanisms are used. They are mounted at the outer surface of base plate.

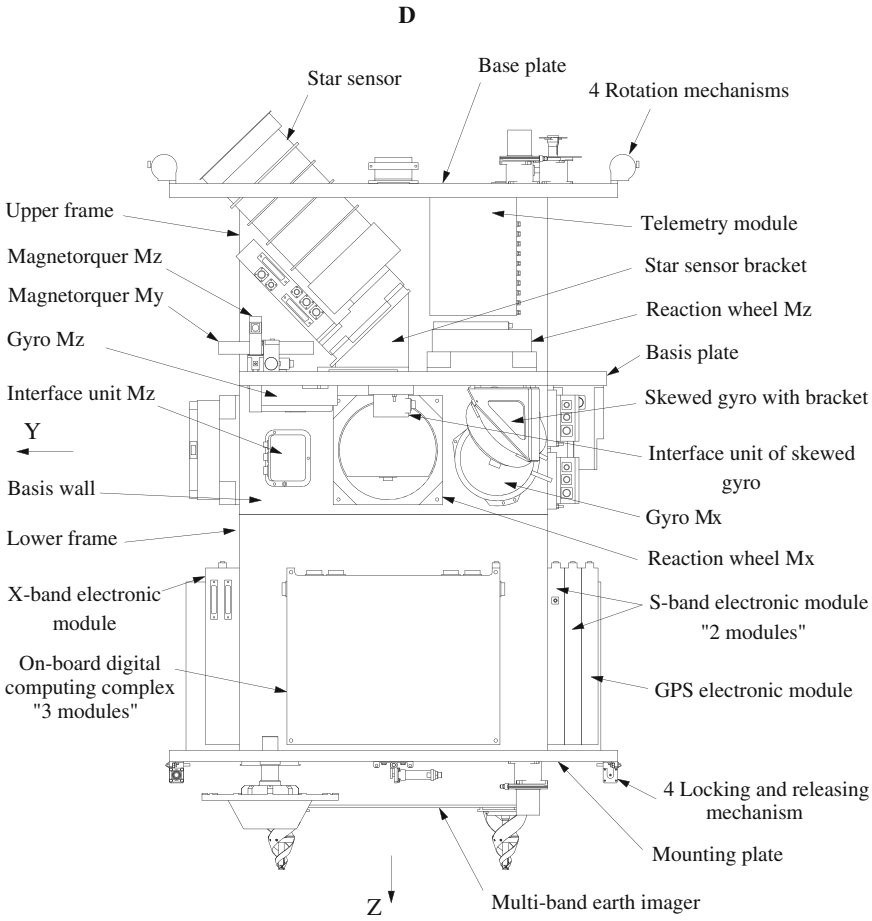


**Fig. 2.17** General layout of Small Sat in the X-direction without solar panels or heat shields

Four locking and releasing mechanisms are mounted at the outer surface of the mounting plate. A separation transducer is used as a sensor for in-orbit separation of the satellite from the launch vehicle adapter. For redundancy, another one is installed and both are mounted at the outer surface of base plate. Four heat shields are used in Small Sat to cover and protect the internal components from environmental effects. They consist of two groups of panels to be suitable for covering the rectangular shape of the satellite.

Figure 2.12 shows the packaging arrangement of the conceptual configuration for Small Sat. It shows that a rectangular outer body with a square cross-section main load path can indeed hold the required equipment. The body size and packaging layout provide some room for growth and cable routing. Many of the packaging guidelines conflict, so compromises must be used. For example, all heavy components should be located aft to minimize bending moments at the

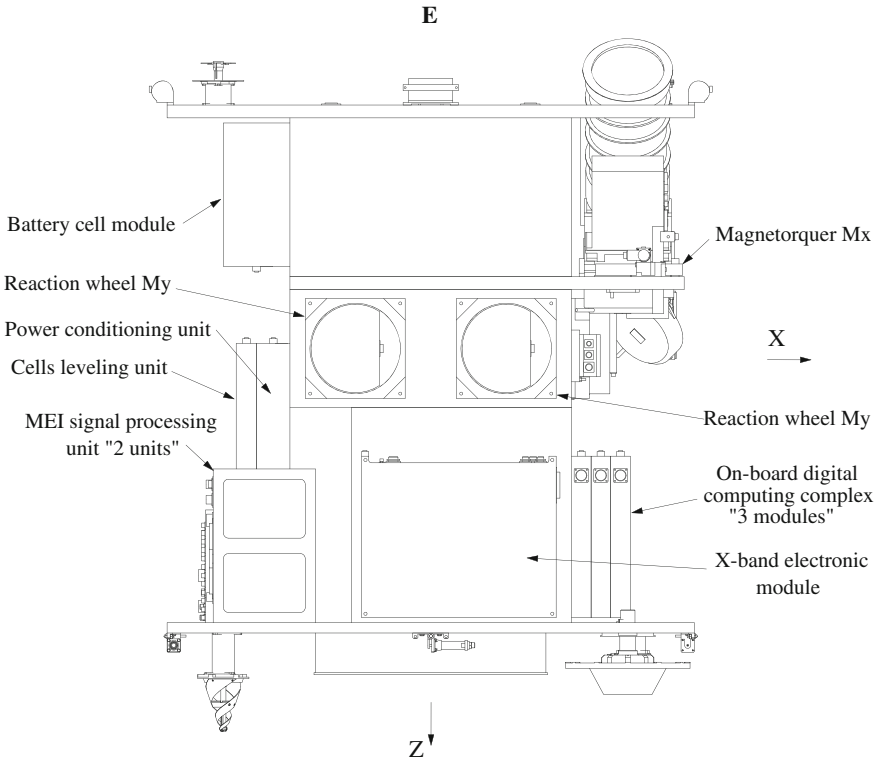


**Fig. 2.18** General layout of Small Sat in the Y-direction without solar panels or heat shields

lunch vehicle interface, but the limited packaging volume prevents this. Although the on-board digital computing complex is heavy (11.1 kg), it is mounted at the forward end to balance mass distribution.

Finally, the results of our efforts in the packaging process for Small Sat configuration are presented in the form of configuration layouts. These layout drawings show as many details of the configuration. Moreover, these will become the basis for much effort on the part of subsystem and structural designers. Figures 2.13, 2.14, 2.15 and 2.16 show different views of Small Sat's preliminary stowed configuration. Figures 2.17, 2.18, 2.19, and 2.20 show different views of the general layout of Small Sat without solar panels and heat shields. Figure 2.21 shows different views of the preliminary deployed configuration for Small sat.

### *2.7.5 Mechanical Interfaces*

Satellite configuration design should provide easy access between the satellite and both of the launch vehicle adapter and mechanical ground support equipment

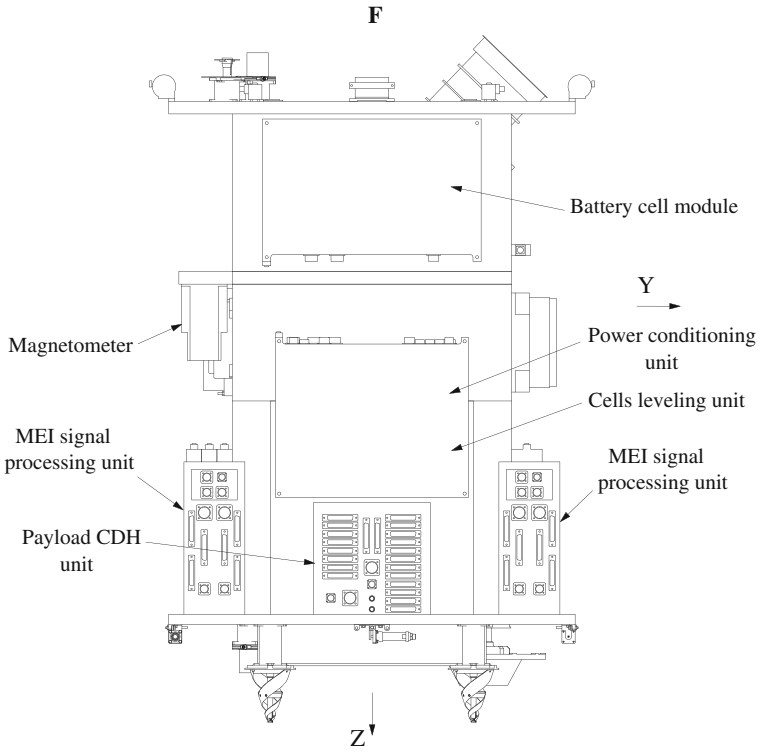


**Fig. 2.19** General layout of Small Sat in the opposite side of X-direction without solar panels or heat shields

(MGSE). To provide this, the satellite configuration must enclose suitable mechanical interfaces to meet both launch vehicle adapter and mechanical ground support equipment. Mechanical interface of the satellite with the adapter of Dnepr launch vehicle is realized by pyro-locks screwed from the side of adapter in threaded holes located in the satellite base plate. Dimensions and location of these holes depend on the satellite body shape, main load path, and total weight of the satellite. As mentioned before, Small Sat conceptual configuration has a rectangular outer body with a square cross-section main load path, so four threaded holes are used to conduct mechanical interface between Small sat and launch vehicle adapter. Location of the threaded holes is given in general view of the satellite in stowed configuration in Fig. 2.14. Mechanical interfaces of the satellite with mechanical ground support equipments are provided by using the same four threaded holes located in the base plate. The mounting plate must contain another set of holes to provide mechanical interfaces with rigging devices of MGSE.

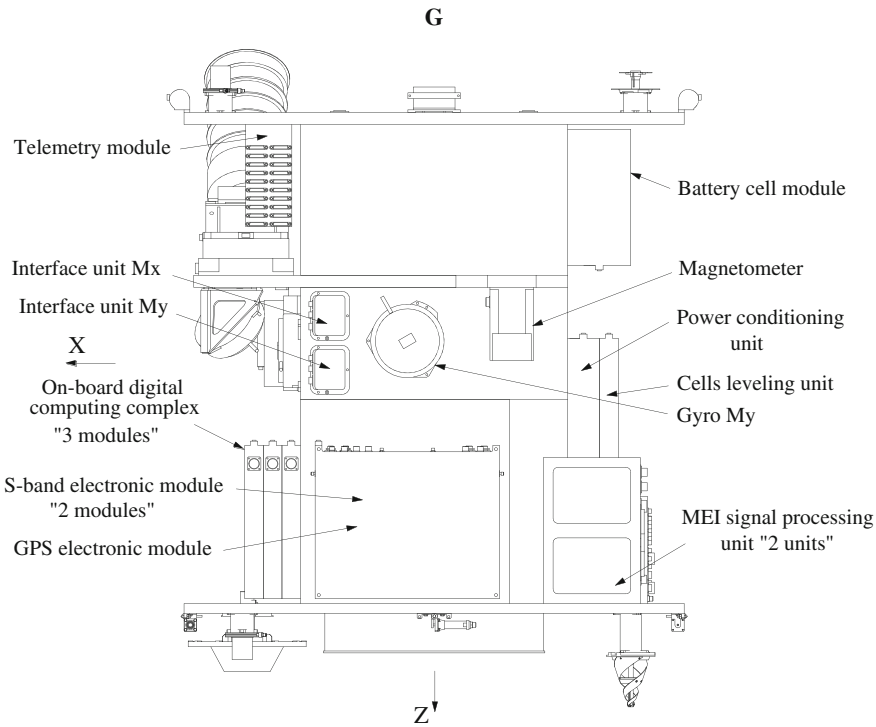


**Fig. 2.20** General layout of Small Sat in the opposite side of Y-direction without solar panels or heat shields

## *2.7.6 Coordinate System*

The following rectangular right-hand coordinates are applied.

- Design coordinate system "$O_dX_dY_dZ_d$"

Origin of coordinates is in LV/satellite interface plane on the center lines of the launch vehicle and satellite; it coincides with the geometrical center of the base plate. $O_dZ_d$ axis is perpendicular to the LV/satellite interface plane with +Z toward the nose of the fairing that corresponds to nadir on orbit. $O_dX_d$ axis lies in the interface plane and is pointed to direction of flight. $O_dY_d$ axis lies in the interface plane and supplements the design coordinate system to make it a right-hand one (Fig. 2.22).

- Orbital coordinate system "O $X_oY_oZ_o$"

Origin of coordinates O coincides with the satellite's center of mass. $OZ_o$ is directed along a radius vector which joins the satellite's center of mass and the Earth's center, where +Z in nadir direction. $OX_o$ lies in the satellite's orbital plane and is orbital motion-directed. $OY_o$ supplements the orbital coordinates to make them a right-hand system (Fig. 2.22).

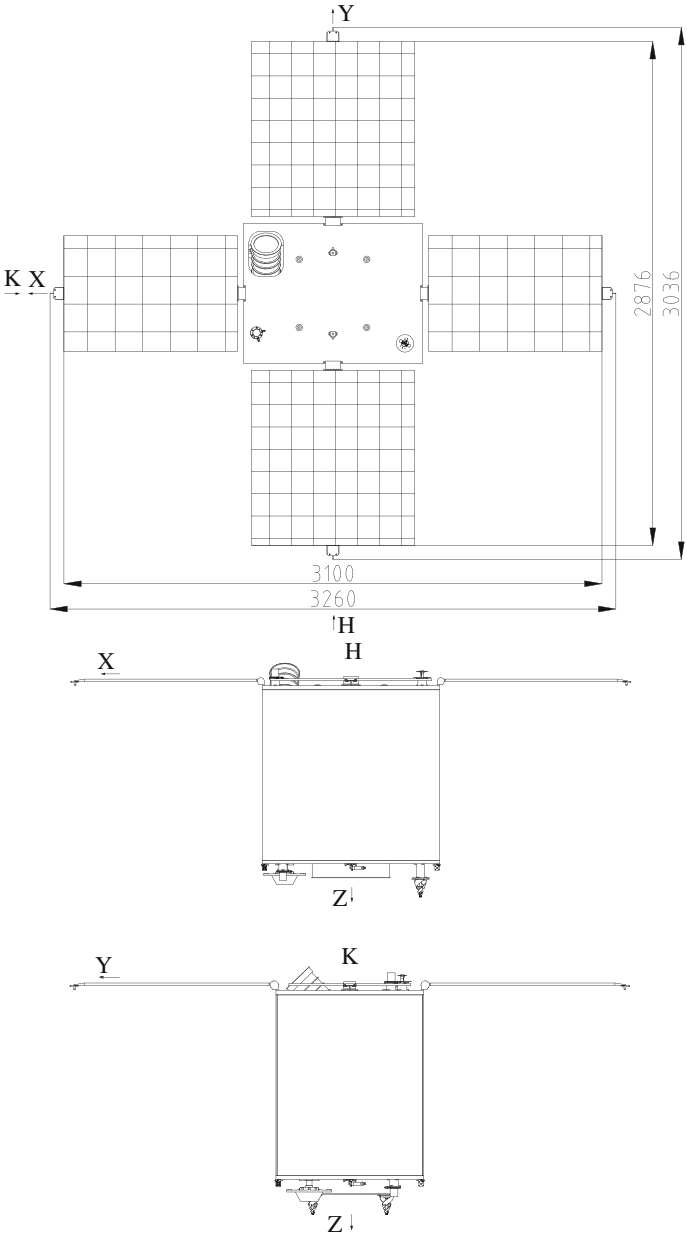


**Fig. 2.21** General view of the satellite in deployed configuration

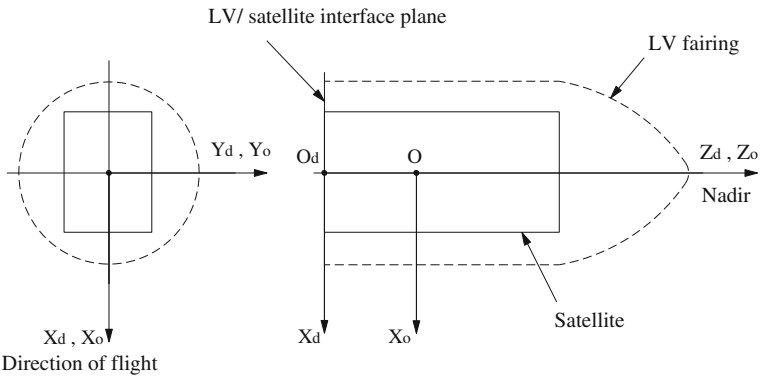


**Fig. 2.22** Coordinate systems

## 2.8 Mass Properties

One of the products of configuration development is a summary of mass properties. This summary should show:

- Mass and centroidal mass moments of inertia of each component about axes aligned with a reference coordinate system
- Coordinates of each component's center of mass
- Mass, center of mass, and moments of inertia of the full satellite in both stowed and deployed configurations

This information is needed for various analyses. The satellite's stowed mass properties are needed to compare with launch vehicle limitations, design structures for launch loading, and predict natural frequencies. The deployed mass properties are needed to support structural and attitude control analyses. And mass properties for individual components are needed to generate math models, size mechanisms, and design secondary and tertiary structures. The calculation of mass properties of Small Sat is done with a computer aided design system using Mechanical Desktop package "MDT". Table 2.4 lists mass properties of each item in the equipments list (Table 2.3) in addition to other components identified during conceptual configuration design. The design coordinate system $O_dX_dY_dZ_d$ is used as a reference to calculate the center of mass coordinates for each component. On the other hand, centroidal mass moments of inertia of each item are calculated about axes aligned with an orbital coordinate system. For Small Sat, the 41 kg predicted for satellite structures are distributed to major structure modules in the configuration, based on rough estimates.

Table 2.5 lists mass properties for the full satellite in both stowed and deployed configurations. Center of mass coordinates are calculated relative to the design coordinate system $O_dX_dY_dZ_d$. Satellite moments of inertia in both stowed and

**Table 2.4** Mass properties for each component in Small Sat

| Component | Mass(kg) | Coordinates (mm) | | | Centroidal mass moment of inertia (kg.m$^2$) | | |
|---|---|---|---|---|---|---|---|
| | | x | y | z | $I_{0x}$ | $I_{0y}$ | $I_{0z}$ |
| Multi-band earth imager | 45 | 0 | 0 | 400 | 3.89 | 3.95 | 1.24 |
| Payload CDH unit | 7.2 | −363 | 0 | 900 | 0.061 | 0.045 | 0.048 |
| MEI signal processing unit-1 | 3.7 | −328 | −310 | 860 | 0.032 | 0.04 | 0.017 |
| MEI signal processing unit-2 | 3.7 | −328 | 310 | 860 | 0.032 | 0.04 | 0.017 |
| Star sensor | 4 | 386 | 136 | 140 | 0.056 | 0.038 | 0.033 |
| Gyro $M_x$ | 1 | 297 | −185 | 490 | 0.003 | 0.002 | 0.002 |
| Gyro $M_y$ | 1 | 55 | −297 | 470 | 0.002 | 0.003 | 0.002 |
| Gyro $M_z$ | 1 | 375 | 175 | 382 | 0.002 | 0.002 | 0.003 |
| Skewed gyro with bracket | 1.2 | 421 | −201 | 432 | 0.003 | 0.003 | 0.002 |
| Interface unit $M_x$ | 0.92 | 216 | −301 | 529 | 0.001 | 0.001 | 0.001 |
| Interface unit $M_y$ | 0.92 | 216 | −301 | 418 | 0.001 | 0.001 | 0.001 |
| Interface unit $M_z$ | 0.92 | 301 | 189 | 489 | 0.001 | 0.001 | 0.001 |
| Interface unit of skewed gyro | 0.92 | 424 | 3 | 386 | 0.001 | 0.001 | 0.001 |
| Magnetometer | 1.5 | −160 | −330 | 431 | 0.004 | 0.004 | 0.002 |
| Magnetorquers with bracket | 1.22 | 420 | 232 | 309 | 0.003 | 0.003 | 0.003 |
| Reaction wheel $M_x$ | 3.3 | 314 | 10 | 474 | 0.016 | 0.010 | 0.010 |
| Reaction wheel $M_y$ -1 | 3.3 | 146 | 314 | 475 | 0.010 | 0.016 | 0.010 |
| Reaction wheel $M_y$ -2 | 3.3 | −149 | 314 | 475 | 0.010 | 0.016 | 0.010 |
| Reaction wheel $M_z$ | 3.3 | 388 | −156 | 296 | 0.010 | 0.010 | 0.016 |
| X-band electronic module | 3.8 | 56 | 305 | 846 | 0.030 | 0.075 | 0.047 |
| X-band antenna | 1.6 | 385 | 220 | 1089 | 0.005 | 0.005 | 0.006 |
| S-band electronic module -1 | 2.2 | 55 | −290 | 846 | 0.017 | 0.044 | 0.027 |
| S-band electronic module -2 | 2.2 | 55 | −320 | 846 | 0.017 | 0.044 | 0.027 |
| S-band conical antenna w/b-1 | 0.3 | −405 | −200 | 1124 | 0.0006 | 0.0006 | 0.0002 |
| S-band conical antenna w/b-2 | 0.3 | −405 | 200 | 1124 | 0.0006 | 0.0006 | 0.0002 |

(continued)

**Table 2.4** (continued)

| Component | Mass(kg) | Coordinates (mm) | | | Centroidal mass moment of inertia (kg.m$^2$) | | | |
|---|---|---|---|---|---|---|---|---|
| | | x | y | z | $I_{0x}$ | $I_{0y}$ | $I_{0z}$ | |
| S-band dipole antenna w/b | 0.15 | −415 | −285 | −50 | 0.0001 | 0.0001 | 0.0001 | |
| GPS electronic module | 1.1 | 56 | −350 | 846 | 0.009 | 0.022 | 0.014 | |
| GPS antenna with bracket -1 | 0.17 | 439 | −225 | −45 | 0.0001 | 0.0001 | 0.0001 | |
| GPS antenna with bracket -2 | 0.17 | 394 | −240 | 1075 | 0.0001 | 0.0001 | 0.0001 | |
| On-board computer -1 | 3.7 | 294 | 0 | 847 | 0.074 | 0.029 | 0.046 | |
| On-board computer -2 | 3.7 | 332 | 0 | 847 | 0.074 | 0.029 | 0.046 | |
| On-board computer -3 | 3.7 | 370 | 0 | 847 | 0.074 | 0.029 | 0.046 | |
| Telemetry Module | 2.8 | 340.5 | 144 | 130 | 0.016 | 0.012 | 0.008 | |
| Battery cell module | 16.5 | −340 | 0 | 169 | 0.354 | 0.122 | 0.278 | |
| Power-conditioning unit | 3.6 | −307 | 0 | 626 | 0.071 | 0.029 | 0.044 | |
| Cells leveling unit | 1.9 | −360 | 0 | 628 | 0.038 | 0.015 | 0.023 | |
| Cabling | 15 | – | – | – | – | – | – | |
| Solar panel-1 (+Y) | Stowed | 2 | 0 | 414 | 512 | 0.172 | 0.313 | 0.141 |
| | Deployed | | 0 | 950 | −34 | 0.172 | 0.141 | 0.313 |
| Solar panel-1 (−Y) | Stowed | 2 | 0 | −414 | 512 | 0.172 | 0.313 | 0.141 |
| | Deployed | | 0 | −950 | −34 | 0.172 | 0.141 | 0.313 |
| Solar panel-2 (+X) | Stowed | 1.4 | 529 | 0 | 516 | 0.173 | 0.124 | 0.049 |
| | Deployed | | 1066 | 0 | −31 | 0.049 | 0.124 | 0.173 |
| Solar panel-2 (−X) | Stowed | 1.4 | −529 | 0 | 516 | 0.173 | 0.124 | 0.049 |
| | Deployed | | −1066 | 0 | −31 | 0.049 | 0.124 | 0.173 |
| Heat shield-1 (+Y) | 1 | 0 | 397 | 518 | 0.082 | 0.172 | 0.090 | |
| Heat shield-1 (−Y) | 1 | 0 | −397 | 518 | 0.082 | 0.172 | 0.090 | |
| Heat shield-2 (+X) | 0.8 | 512 | 0 | 518 | 0.103 | 0.063 | 0.040 | |
| Heat shield-2 (−X) | 0.8 | −512 | 0 | 518 | 0.103 | 0.063 | 0.040 | |
| Insulation, coatings, sensors | 1.5 | – | – | – | – | – | – | |

(continued)

**Table 2.4** (continued)

| Component | Mass(kg) | Coordinates (mm) | | | Centroidal mass moment of inertia (kg.m$^2$) | | |
|---|---|---|---|---|---|---|---|
| | | x | y | z | $I_{0x}$ | $I_{0y}$ | $I_{0z}$ |
| Base plate | 6 | – | – | – | – | – | – |
| Upper frame | 6.5 | – | – | – | – | – | – |
| Basis plate | 4 | – | – | – | – | – | – |
| Basis walls | 6.5 | – | – | – | – | – | – |
| Lower frame | 7 | – | – | – | – | – | – |
| Mounting plate | 5.5 | – | – | – | – | – | – |
| Star sensor bracket | 1.1 | 385 | 41 | 286 | 0.004 | 0.005 | 0.005 |
| Rotation mechanism-1 (+Y) | 0.5 | 0 | 408 | −26 | 0.0002 | 0.0004 | 0.0004 |
| Rotation mechanism-1 (-Y) | 0.5 | 0 | −408 | −26 | 0.0002 | 0.0004 | 0.0004 |
| Rotation mechanism-2 (+X) | 0.35 | 523 | 0 | −23 | 0.0002 | 0.0001 | 0.0002 |
| Rotation mechanism-2 (-X) | 0.35 | −523 | 0 | −23 | 0.0002 | 0.0001 | 0.0002 |
| Locking mechanism (+Y) | 0.1 | 20 | 388 | 1047 | 0.00001 | 0.00008 | 0.00007 |
| Locking mechanism (-Y) | 0.1 | 20 | −388 | 1047 | 0.00001 | 0.00008 | 0.00007 |
| Locking mechanism (+X) | 0.1 | 503 | −20 | 1047 | 0.00008 | 0.00001 | 0.00007 |
| Locking mechanism (−X) | 0.1 | −503 | −20 | 1047 | 0.00008 | 0.00001 | 0.00007 |
| Separation transducer -1 | 0.05 | 0 | 232 | −17 | 0.00001 | 0.00001 | 0.00001 |
| Separation transducer -2 | 0.05 | 0 | −232 | −17 | 0.00001 | 0.00001 | 0.00001 |
| Fastening | 4 | – | – | – | – | – | – |
| Satellite total mass | 205 kg | | | | | | |

**Table 2.5** Mass properties for the whole configuration of Small Sat in both stowed and deployed configurations

| Small Sat mass properties | Satellite stowed configuration | Satellite operating configuration |
|---|---|---|
| Mass (kg) | 205 | |
| Center of mass (mm) | | |
| X | −1.65 ± 10 | −1.65 ± 10 |
| Y | 0.51 ± 10 | 0.51 ± 10 |
| Z | 487.26 ± 10 | 467.72 ± 10 |
| Mass moments of inertia (kg.m$^2$) | | |
| Ixx | 26.69 ± 1 | 31.04 ± 1 |
| Iyy | 33.64 ± 1 | 37.41 ± 1 |
| Izz | 22.09 ± 1 | 27.93 ± 1 |
| Ixy | −0.01 | −0.01 |
| Ixz | 0.19 | 0.19 |
| Iyz | 0.06 | 0.06 |

deployed (operating) configuration are calculated relatively to axes aligned with an orbital coordinate system. The origin of both coordinates coincides with the satellite's center of mass.

## References

1. Sarafin TP, Larson WJ (eds) (1995) Spacecraft structures and mechanisms—from concept to launch. Microcosm Press and Kluwer Academic Publishers, Torrance, CA
2. Dnepr SLS User's Guide, Issue 2, Nov. 2001. http://www.kosmotras.ru

http://www.springer.com/978-1-4471-4636-0

Finite Element Analysis for Satellite Structures
Applications to Their Design, Manufacture and Testing
Abdelal, G.F.; Abuelfoutouh, N.; Gad, A.H.
2013, X, 334 p., Hardcover
ISBN: 978-1-4471-4636-0